Work Order ID 73052

Wednesday, August 24, 2011 3:35:03 PM

Item ID: D2052 **Accept** **Setup Start**

Revision ID:

Item Name: Mounting Bracket **Stop**

Start Date: 8/25/2011 **Start Qty:** 10.00 **Cust Item ID:**

Required Date: 9/8/2011 **Req'd Qty:** 10.00 **Customer:**

Reference:

Approvals: **Process Plan:** MF **Date:** 11-08-24 **Tooling:** **Date:** **Run Start**

QC: **Date:** **SPC (Y/N):** **Date:** **Stop**

Sequence ID/ Work Center ID	Operation Description	Set Up/ Run Hours	Tool ID	Tool #	Plan Code	Accept Qty	Reject Qty	Reject Number	Insp. Stamp
Draw Nbr	**Revision Nbr**								
D2052	Rev D								
100	FLOW WATER JET	0.00							
Waterjet	**Memo**	0.00				FB11-8-31			
FLOW CNC Waterjet S052.090	1-Cut as per Dwg D2052 Dwg Rev: D Prog Rev: B ****grain direction along 3.878" **** 2-Deburr if necessary								19
110	QC2- Inspect parts off machine FAI/FAIB	0.00							
QC	**Memo**	0.00				FB11-8-31			
Quality Control									

Dart Aerospace Ltd

W/O:		WORK ORDER CHANGES					
DATE	STEP	PROCEDURE CHANGE	By	Date	Qty	Approval Chief Eng / Prod Mgr	Approval QC Inspector

Part No: _____ **PAR #:** _____ **Fault Category:** _____ **NCR:** Yes No **DQA:** _____ **Date:** _____

Resolution: _____ **Disposition:** _____ **QA: N/C Closed:** _____ **Date:** _____

NCR:		WORK ORDER NON-CONFORMANCE (NCR)						
DATE	STEP	Description of NC Section A	Corrective Action Section B			Verification Section C	Approval Chief Eng	Approval QC Inspector
			Initial Chief Eng	Action Description Chief Eng	Sign & Date			

NOTE: Date & initial all entries

H:\fFORMS\Quality Assurance\approved QA\NCRWO RevE

Work Order ID 73052

Wednesday, August 24, 2011 3:35:03 PM

Item ID: D2052 **Accept** **Setup Start**

Revision ID: **Stop**

Item Name: Mounting Bracket

Start Date: 8/25/2011 **Start Qty:** 10.00 **Cust Item ID:**

Required Date: 9/8/2011 **Req'd Qty:** 10.00 **Customer:**

Reference:

Run Start

Approvals: **Process Plan:** _____ **Date:** _____ **Tooling:** _____ **Date:** _____

Stop

QC: _____ **Date:** _____ **SPC (Y/N):** _____ **Date:** _____

Sequence ID/ Work Center ID	Operation Description	Set Up/ Run Hours	Tool ID	Tool #	Plan Code	Accept Qty	Reject Qty	Reject Number	Insp. Stamp
120 QC Quality Control	QC8- Inspect parts - second check **Memo**	0.00 0.00				X19			
130 Brake NC Brake NC	NC BRAKE **Memo** Form as per Dwg D2052 using CNC Brake	0.00 0.00				19			
140 QC Quality Control	QC5- Inspect part completeness to step on W/O **Memo**	0.00 0.00				X19			

Dart Aerospace Ltd

W/O:		WORK ORDER CHANGES					
DATE	STEP	PROCEDURE CHANGE	By	Date	Qty	Approval Chief Eng / Prod Mgr	Approval QC Inspector

Part No: _____ **PAR #:** _____ **Fault Category:** _____ **NCR:** Yes No **DQA:** _____ **Date:** _____

Resolution: _____ **Disposition:** _____ **QA: N/C Closed:** _____ **Date:** _____

NCR:		WORK ORDER NON-CONFORMANCE (NCR)						
DATE	STEP	Description of NC Section A	Corrective Action Section B			Verification Section C	Approval Chief Eng	Approval QC Inspector
			Initial Chief Eng	Action Description Chief Eng	Sign & Date			

NOTE: Date & initial all entries

H:\fFORMS\Quality Assurance\approved QA\NCRWO RevE

Work Order ID 73052

Wednesday, August 24, 2011 3:35:03 PM

Item ID: D2052 **Accept** **Setup Start**

Revision ID: **Stop**

Item Name: Mounting Bracket

Start Date: 8/25/2011 **Start Qty:** 10.00 **Cust Item ID:**

Required Date: 9/8/2011 **Req'd Qty:** 10.00 **Customer:**

Reference:

Run Start

Approvals: **Process Plan:** _____ **Date:** _____ **Tooling:** _____ **Date:** _____

Stop

QC: _____ **Date:** _____ **SPC (Y/N):** _____ **Date:** _____

Sequence ID/ Work Center ID	Operation Description	Set Up/ Run Hours	Tool ID	Tool #	Plan Code	Accept Qty	Reject Qty	Reject Number	Insp. Stamp
150	Chemical Conversion Coat per QSI005 4.1	0.00							
HandFinish	Memo	0.00							
Hand Finishing									
160	Black Sandtex(Ref:4.3.5.7) per QSI005 4.3	0.00							
Powdercoat	Memo	0.00							
Powder Coating	START TIME: 10:20 OVEN TEMPERATURE: 320°F FINISH TIME: 10:50								
170	QC3- Inspect Part Finish	0.00							
QC	Memo	0.00							
Quality Control									

19 X Ø M-L 11/09/07

14 X Ø M-L 11/09/14

M115128

19 Ø 11/09/11

Dart Aerospace Ltd

W/O:		WORK ORDER CHANGES					
DATE	STEP	PROCEDURE CHANGE	By	Date	Qty	Approval Chief Eng / Prod Mgr	Approval QC Inspector

Part No: _____ **PAR #:** _____ **Fault Category:** _____ **NCR:** Yes No **DQA:** _____ **Date:** _____

Resolution: _____ **Disposition:** _____ **QA: N/C Closed:** _____ **Date:** _____

NCR:		WORK ORDER NON-CONFORMANCE (NCR)						
DATE	STEP	Description of NC Section A	Corrective Action Section B			Verification Section C	Approval Chief Eng	Approval QC Inspector
			Initial Chief Eng	Action Description Chief Eng	Sign & Date			

NOTE: Date & initial all entries

H:\fFORMS\Quality Assurance\approved QA\NCRWO RevE

Work Order ID 73052

Wednesday, August 24, 2011 3:35:03 PM

Item ID: D2052 **Accept** **Setup Start**

Revision ID: **Stop**

Item Name: Mounting Bracket

Start Date: 8/25/2011 **Start Qty:** 10.00 **Cust Item ID:**

Required Date: 9/8/2011 **Req'd Qty:** 10.00 **Customer:**

Reference:

Run Start

Approvals: **Process Plan:** _____ **Date:** _____ **Tooling:** _____ **Date:** _____

Stop

QC: _____ **Date:** _____ **SPC (Y/N):** _____ **Date:** _____

Sequence ID/ Work Center ID	Operation Description	Set Up/ Run Hours	Tool ID	Tool #	Plan Code	Accept Qty	Reject Qty	Reject Number	Insp. Stamp
180	Identify as per dwg & Stock Location: ST 5	0.00							
Packaging				194		11-09-15			
	Memo	0.00							
Packaging									
190	QC21- Final Inspection - Work Order Release	0.00				11/9/16			
QC									
	Memo	0.00							
Quality Control									

MF
11-09-15

Dart Aerospace Ltd

W/O:		WORK ORDER CHANGES					
DATE	STEP	PROCEDURE CHANGE	By	Date	Qty	Approval Chief Eng / Prod Mgr	Approval QC Inspector

Part No: _____ **PAR #:** _____ **Fault Category:** _____ **NCR:** Yes No **DQA:** _____ **Date:** _____

Resolution: _____ **Disposition:** _____ **QA: N/C Closed:** _____ **Date:** _____

NCR:		WORK ORDER NON-CONFORMANCE (NCR)						
DATE	STEP	Description of NC Section A	Corrective Action Section B			Verification Section C	Approval Chief Eng	Approval QC Inspector
			Initial Chief Eng	Action Description Chief Eng	Sign & Date			

NOTE: Date & initial all entries

H:\fFORMS\Quality Assurance\approved QA\NCRWO RevE

Picklist Print

Wednesday, August 24, 2011 3:35:00 PM

Work Order ID: 73052

Parent Item: D2052

Parent Item Name: Mounting Bracket

Start Date: 8/25/2011 **Required Date:** 9/8/2011

Start Qty: 10.00 **Required Qty:** 10.00

Comments: IPP C□01.08.21□Added Finishing □SM□(Issue this IPP with part number D2053)
IPP Rev:D now water jet 07-10-25 DD
IPP Rev:E 08-05-14 chg to revD as per ECN1171 DD verified by:EC

Component Item ID/ Item Name	Replacement Item ID	Mfg/ Purch	Bin Item	Primary Location	Last Location	Route Seq ID	Unit of Measure	Qty on Hand	Qty per Kit	Total Qty	Qty Issued	Date Issued	Status
M5052H32S.090 5052-H32 .090 Sheet		Purchased	No			100	sf	49.9000	0.129	1.357895	3, B 11-8-31		

Location		Loc Qty	Loc Code
MAT022		32	
	118641	32	
MAT22		17.9	
	3019	17.9	3019

19

Dart Aerospace Ltd

W/O:		WORK ORDER CHANGES					
DATE	STEP	PROCEDURE CHANGE	By	Date	Qty	Approval Chief Eng / Prod Mgr	Approval QC Inspector

Part No: _____ **PAR #:** _____ **Fault Category:** _____ **NCR:** Yes No **DQA:** _____ **Date:** _____

Resolution: _____ **Disposition:** _____ **QA: N/C Closed:** _____ **Date:** _____

NCR:		WORK ORDER NON-CONFORMANCE (NCR)						
DATE	STEP	Description of NC Section A	Corrective Action Section B			Verification Section C	Approval Chief Eng	Approval QC Inspector
			Initial Chief Eng	Action Description Chief Eng	Sign & Date			

NOTE: Date & initial all entries

H:\fFORMS\Quality Assurance\approved QA\NCRWO RevE

DART AEROSPACE LTD	Work Order:	73658
Description: Bracket	Part Number:	D2052
Inspection Dwg: D2052 **Rev:** D		Page 1 of 1

FIRST ARTICLE INSPECTION CHECKLIST

[X] First Article [ ] Prototype

Drawing Dimension	Tolerance	Actual Dimension	Accept	Reject	Method of Inspection	Comments
Ø0.197 x 0.331	+0.005/-0.001 x +/-0.010	.198 X .332	X		V IB02	
Ø0.641	+0.008/-0.001	.642	X		V	
0.400	+/-0.010	.405	X		V	
0.800	+/-0.010	.804	X		V	
0.400	+/-0.010	.403	X		V	
1.22	+/-0.030	1.22	X		V	
3.237	+/-0.010	3.241	X		V	
1.24	+/-0.030	1.241	X		V	
3.200	+/-0.010	3.201	X		V	
4.000	+/-0.010	3.999	X		V	
4.80	+/-0.030	4.803	X		V	
0.090	+/-0.010	.093	X		V	

Measured by:	IB	Audited by:	S	Prototype Approval:	N/A
Date:	11-8-31	Date:	11/09/01	Date:	N/A

Rev	Date	Change	Revised by	Approved
A	08.06.11	New Issue	KJ/DD	

Dart Aerospace Ltd

W/O:		WORK ORDER CHANGES					
DATE	STEP	PROCEDURE CHANGE	By	Date	Qty	Approval Chief Eng / Prod Mgr	Approval QC Inspector

Part No: _____ **PAR #:** _____ **Fault Category:** _____ **NCR:** Yes No **DQA:** _____ **Date:** _____

Resolution: _____ **Disposition:** _____ **QA: N/C Closed:** _____ **Date:** _____

NCR:		WORK ORDER NON-CONFORMANCE (NCR)						
DATE	STEP	Description of NC Section A	Corrective Action Section B			Verification Section C	Approval Chief Eng	Approval QC Inspector
			Initial Chief Eng	Action Description Chief Eng	Sign & Date			

NOTE: Date & initial all entries

H:\fFORMS\Quality Assurance\approved QA\NCRWO RevE

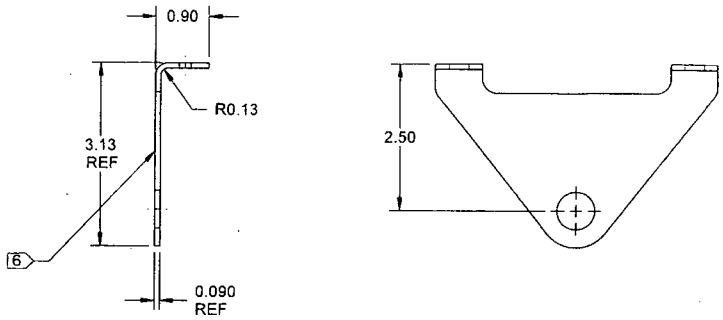

D2052 BRACKET

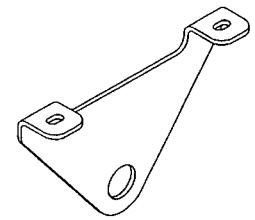

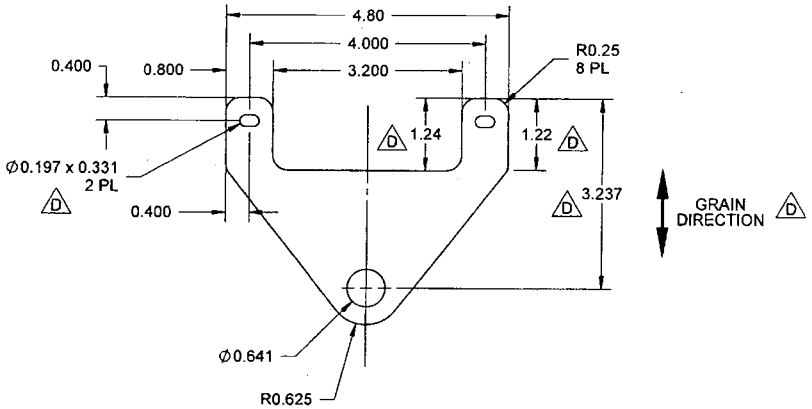

D2052F FLAT PATTERN

73052

RELEASED
08-05-13

NOTES:
1) MATERIAL: 5052-H32 ALUMINUM SHEET 0.090 THICK PER QQ-A-250/8 OR AMS 4016
(REF DART SPEC M5052H32S.090)
OR
6061-T6 (OR-T62) ALUMINUM SHEET 0.090 THICK PER QQ-A-250/11 OR AMS 4025/4027 D
(REF DART SPEC M6061T6S.090)
2) FINISH: CHEMICAL CONVERSION COAT PER DART QSI 005 4.1
POWDER COAT BLACK SANDTEX (4.3.5.7) PER DART QSI 005 4.3 D
3) TOLERANCES: PER DART QSI 018 UNLESS OTHERWISE NOTED
4) UNITS: INCHES UNLESS OTHERWISE NOTED
5) BREAK SHARP EDGES: 0.005 TO 0.010 MAX
6) IDENTIFICATION: IDENTIFY WITH DART P/N "D2052" USING FINE POINT PERMANENT INK MARKER OR LABEL AFTER FINISH D
7) WEIGHT: 0.08 lbs D

REV.	DESCRIPTION	BY	DATE
D	WIDEN SLOT (ZN B7-1); UPDATE FLAT PATTERN DIMENSIONS (ZN B5-1, B6-1); ADD 6061-T6 OPTION (ZN A5-1); ADD CHEMICAL CONVERSION COAT AND CHANGE TO BLACK SANDTEX (ZN A6-1); ADD IDENFICATION (ZN A4-1); ADD WEIGHT (ZN A8-1); ADD GRAIN DIRECTION (ZN B4-1); REASON: PRODUCT IMPROVEMENT (REF PAR 08-012)	PH	08.04.28
C	ADD FLAT PATTERN	RF	99.04.30
B	ADD SLOT TO FOOT	BW	97.02.21
A	NEW ISSUE	BW	92.01.12

DESIGN	BW	DART AEROSPACE LTD HAWKESBURY, ONTARIO, CANADA	
DRAWN			
CHECKED		DRAWING NO. D2052	REV. D SHEET 1 OF 1
MFG. APPR.			
APPROVED		TITLE BRACKET	SCALE NTS
DE APPR.			
DATE	08.04.28		

COPYRIGHT © 1992 BY DART AEROSPACE LTD
THIS DOCUMENT IS PRIVATE AND CONFIDENTIAL AND IS SUPPLIED ON THE EXPRESS CONDITION THAT IT IS NOT TO BE USED FOR ANY PURPOSE OR COPIED OR COMMUNICATED TO ANY OTHER PERSON WITHOUT WRITTEN PERMISSION FROM DART AEROSPACE LTD.

Dart Aerospace Ltd

W/O:		WORK ORDER CHANGES					
DATE	STEP	PROCEDURE CHANGE	By	Date	Qty	Approval Chief Eng / Prod Mgr	Approval QC Inspector

Part No: _____ **PAR #:** _____ **Fault Category:** _____ **NCR:** Yes No **DQA:** _____ **Date:** _____

Resolution: _____ **Disposition:** _____ **QA: N/C Closed:** _____ **Date:** _____

NCR:		WORK ORDER NON-CONFORMANCE (NCR)						
DATE	STEP	Description of NC Section A	Corrective Action Section B			Verification Section C	Approval Chief Eng	Approval QC Inspector
			Initial Chief Eng	Action Description Chief Eng	Sign & Date			

NOTE: Date & initial all entries

H:\FORMS\Quality Assurance\approved QA\NCRWO RevE